QUICK GUIDE

FEKA VS GRINDER

INSTRUCTION MANUAL

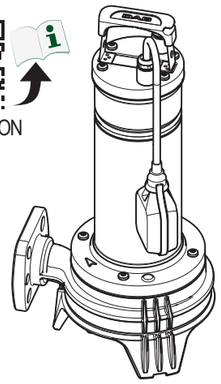

DAB WATER•TECHNOLOGY www.dabpumps.com

1

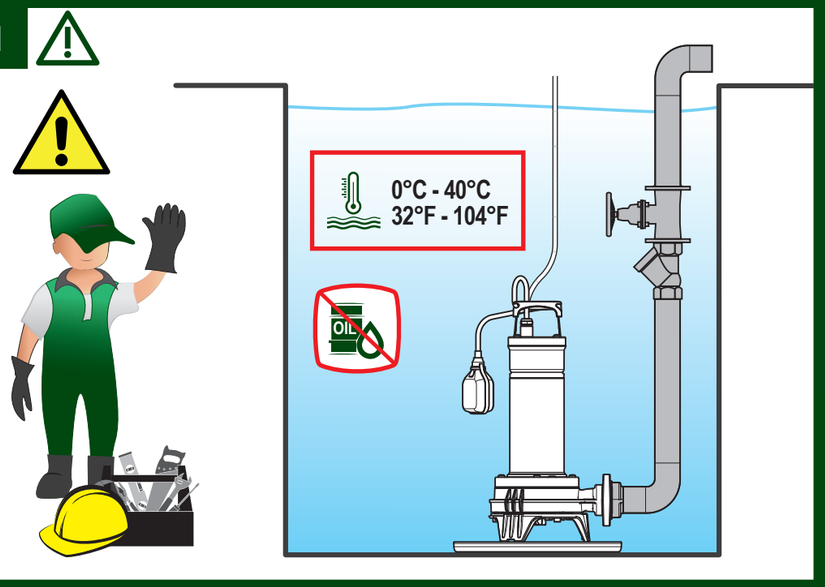

2

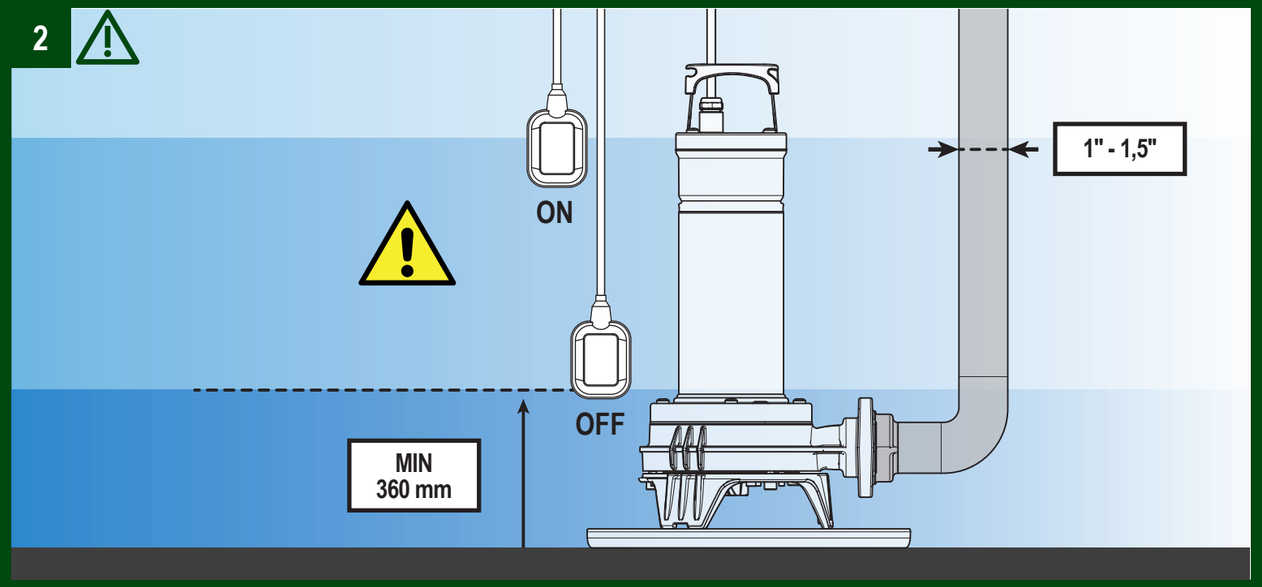

DAB PUMPS LTD.
6 Gilberd Court
Newcomen Way
Severalls Business Park
Colchester, Essex C04 9WN - UK
salesuk@dwtgroup.com
Tel.: +44 0333 777 5010

DAB PUMPS B.V.
1Hofveld 6 C1
1702 Groot Bijgaarden - Belgium
info.belgium@dwtgroup.com
Tel. +32 2 4668353

DAB PUMPS INC.
3226 Benchmark Drive
Ladson, SC 29456 - USA
info.usa@dwtgroup.com
Tel. 1- 843-797-5002
Fax 1-843-797-3366

OOO DAB PUMPS
Novgorodskaya str. 1, block G
office 308, 127247, Moscow - Russia
info.russia@dwtgroup.com
Tel. +7 495 122 0035
Fax +7 495 122 0036

DAB PUMPS POLAND SP. z.o.o.
Ul. Janka Muzykanta 60
02-188 Warszawa - Poland
polska@dabpumps.com.pl

DAB PUMPS (QINGDAO) CO. LTD.
No.40 Kaituo Road, Qingdao Economic &
Technological Development Zone
Qingdao City, Shandong Province - China
PC: 266500
sales.cn@Dwtgroup.com
Tel. +86 400 186 8280
Fax +86 53286812210

DAB PUMPS IBERICA S.L.
Calle Verano 18-20-22
28850 - Torrejón de Ardoz - Madrid
Spain
info.spain@dwtgroup.com
Ph.: +34 91 6569545
Fax: +34 91 6569676

DAB PUMPS B.V.
Albert Einsteinweg, 4
5151 DL Drunen - Nederland
info.netherlands@dwtgroup.com
Tel. +31 416 387280
Fax +31 416 387299

DAB PUMPS SOUTH AFRICA
Twenty One industrial Estate,
16 Purlin Street, Unit B, Warehouse 4
Olifantsfontein - 1666 - South Africa
info.sa@dwtgroup.com
Tel. +27 12 361 3997

DAB PUMPEN DEUTSCHLAND GmbH
Tackweg 11
D - 47918 Tönisvorst - Germany
info.germany@dwtgroup.com
Tel. +49 2151 82136-0
Fax +49 2151 82136-36

DAB PUMPS HUNGARY KFT.
H-8800
Nagykanizsa, Buda Ernő u.5
Hungary
Tel. +36 93501700

DAB PUMPS DE MÉXICO, S.A. DE C.V.
Av Amsterdam 101 Local 4
Col. Hipódromo Condesa
Del. Cuauhtémoc CP 06170
Ciudad de México
Tel. +52 55 6719 0493

DAB PUMPS OCEANIA PTY LTD
426 South Gippsland Hwy,
Dandenong South VIC 3175 – Australia
info.oceania@dwtgroup.com
Tel. +61 1300 373 677

DAB WATER•TECHNOLOGY

DAB PUMPS S.p.A.
Via M. Polo, 14 - 35035 Mestrino (PD) - Italy
Tel. +39 049 5125000 - Fax +39 049 5125950
www.dabpumps.com

12/22 cod. 60212891

3

4

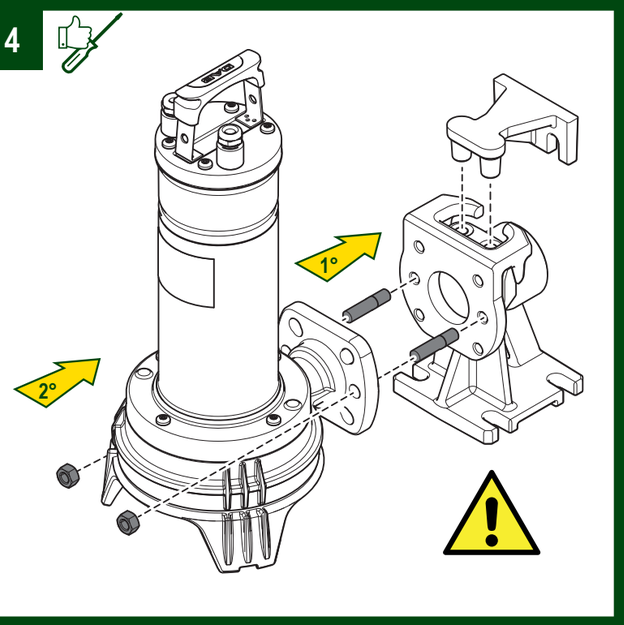

5 START/STOP

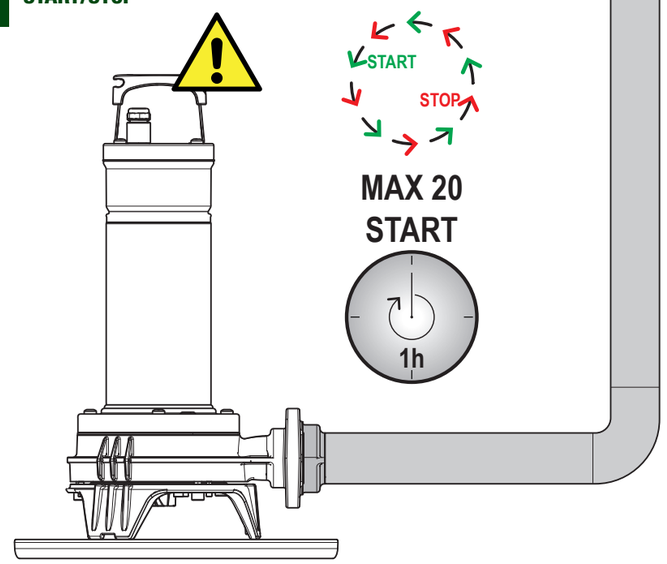

6

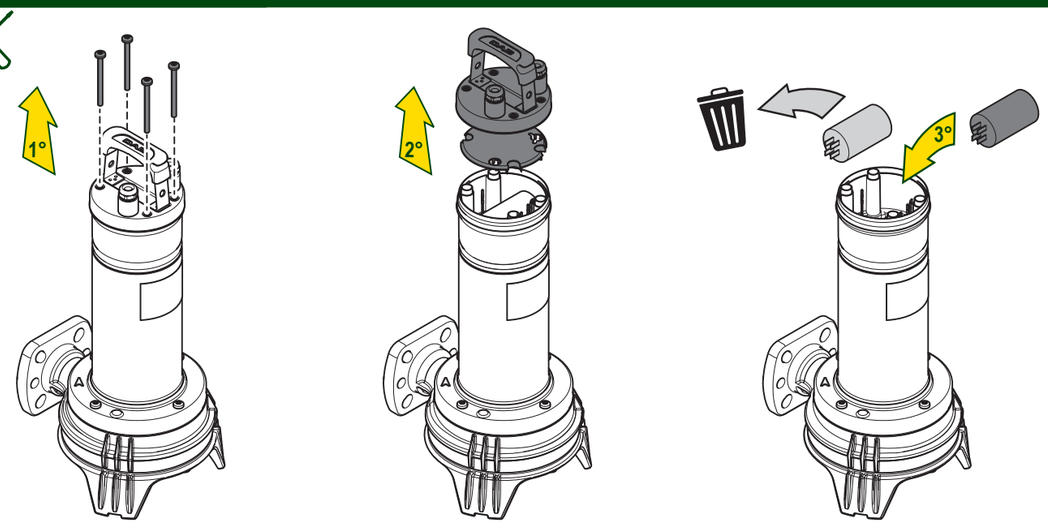

7

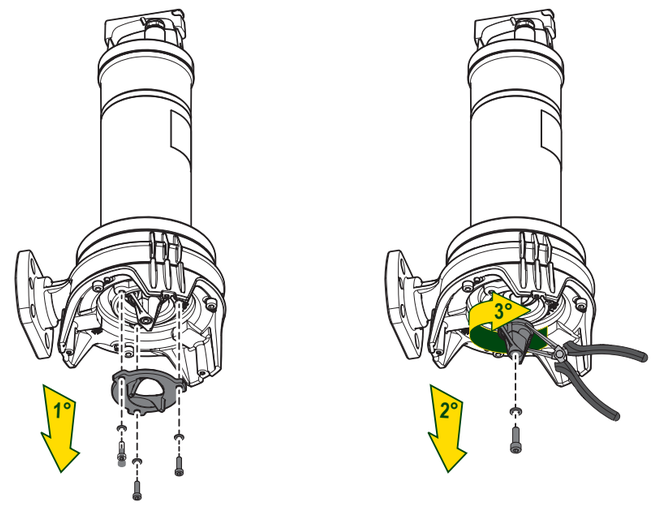

8

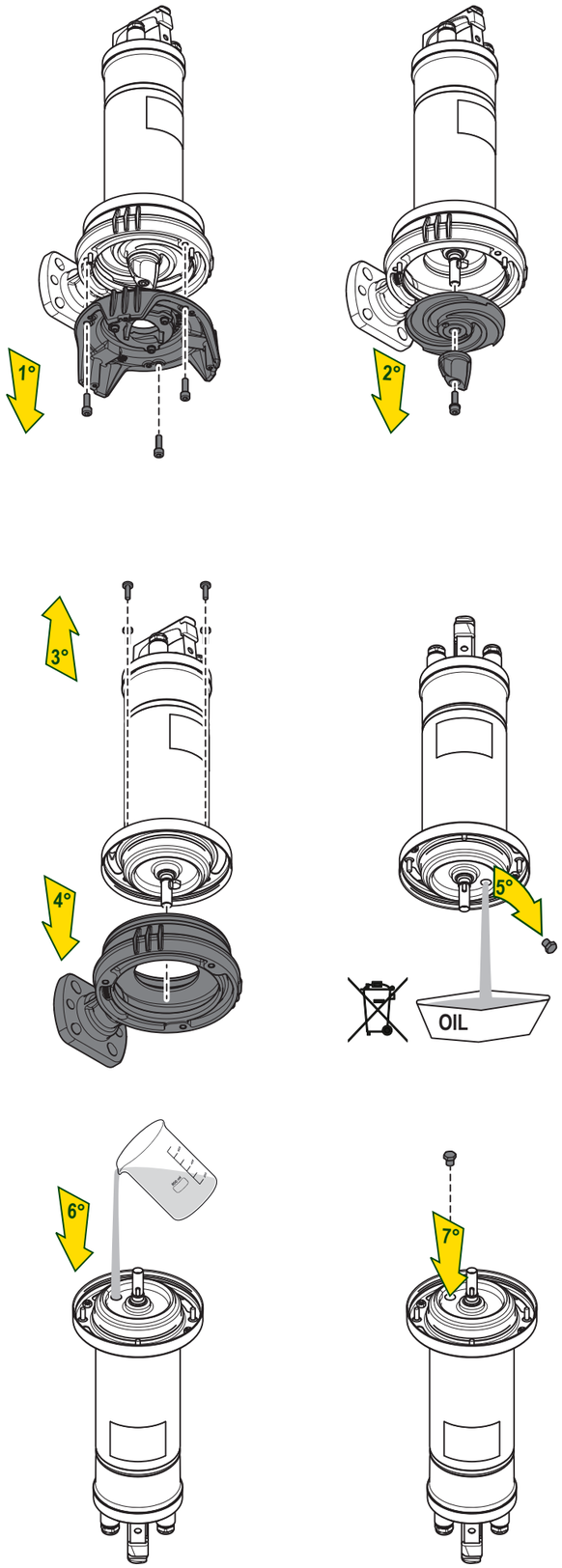
1°
2°
3°
4°
5°
OIL
6°
7°

9

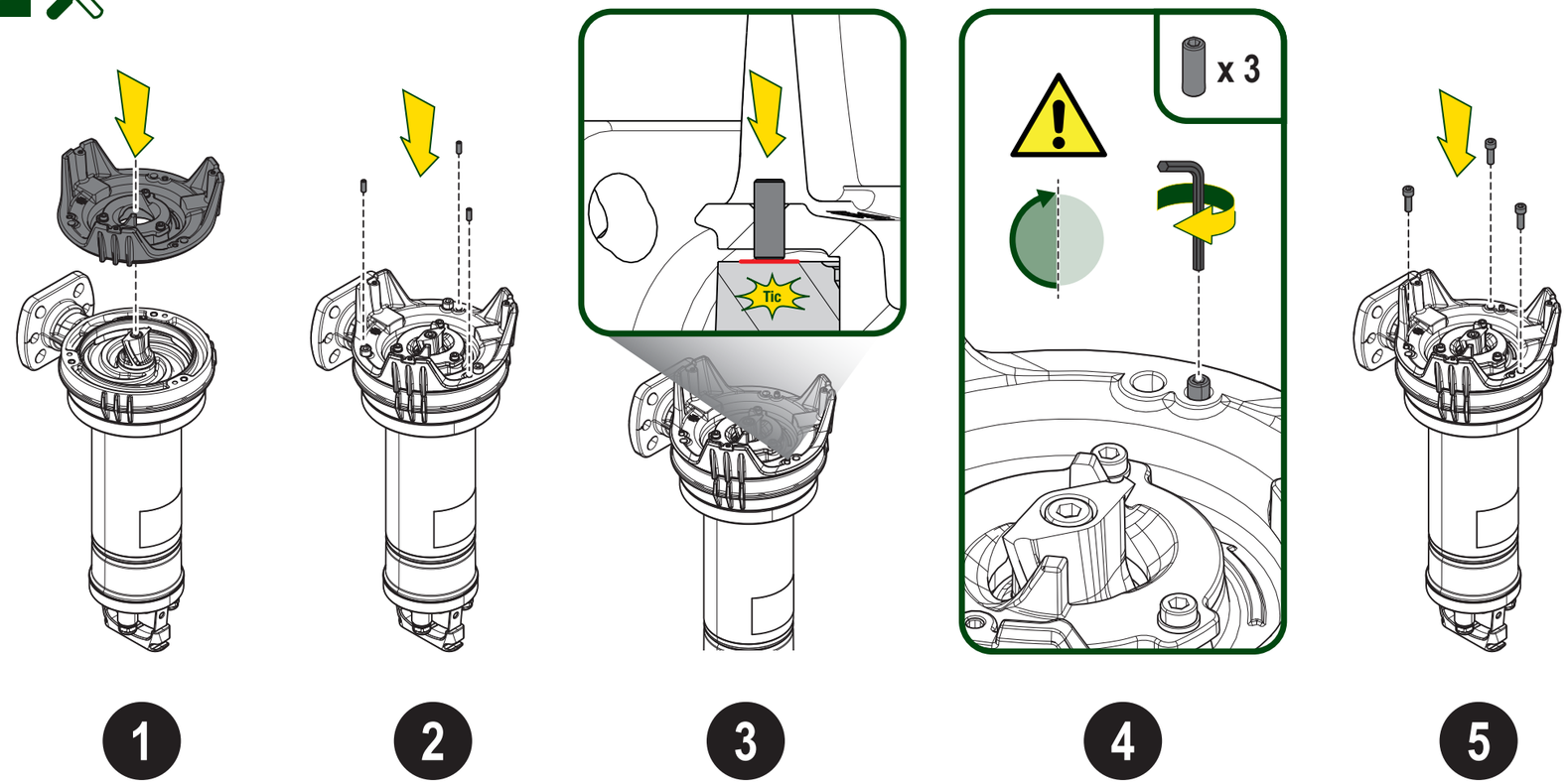
Tic
x 3
1
2
3
4
5

10

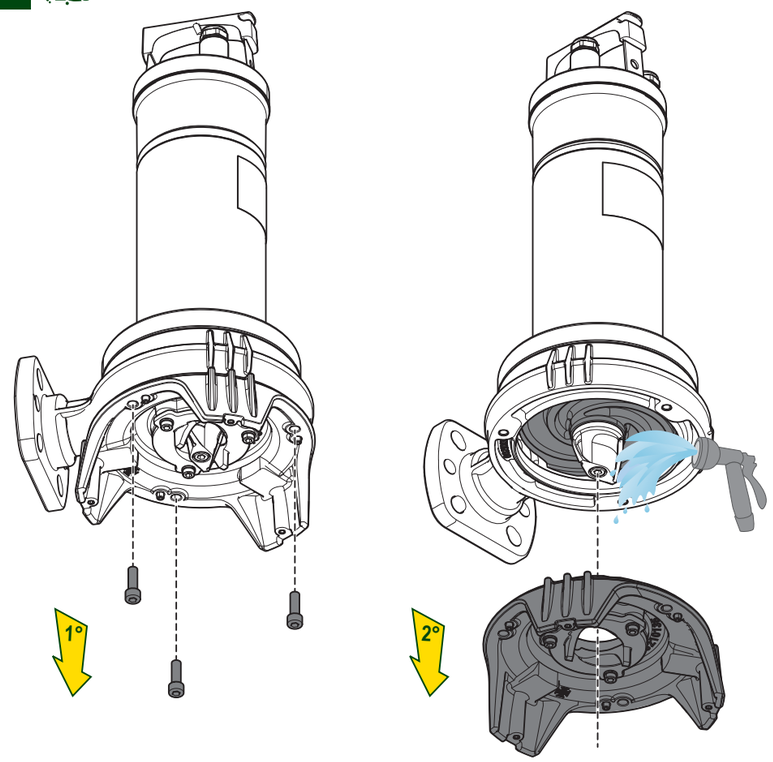
1°
2°

11

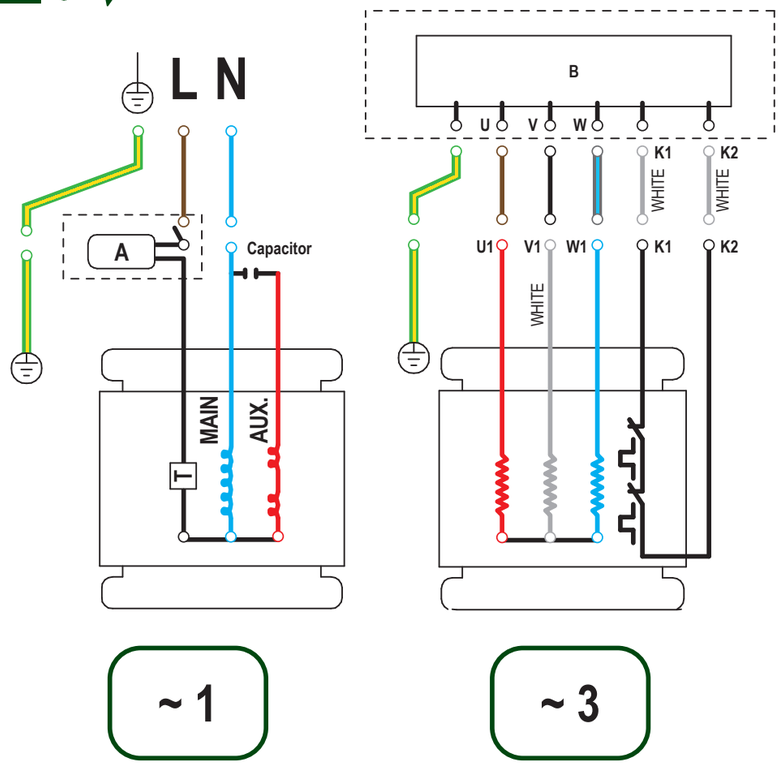
L N
A
Capacitor
MAIN
AUX.
T
~ 1
B
U
V
W
K1
K2
WHITE
WHITE
U1
V1
W1
K1
K2
WHITE
~ 3